Mechanical dimensions

Pinout – bottom view

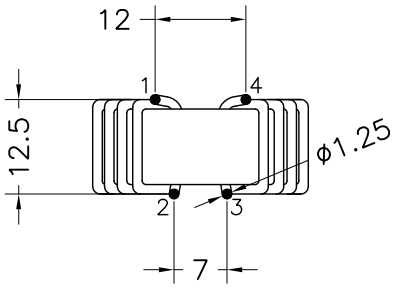

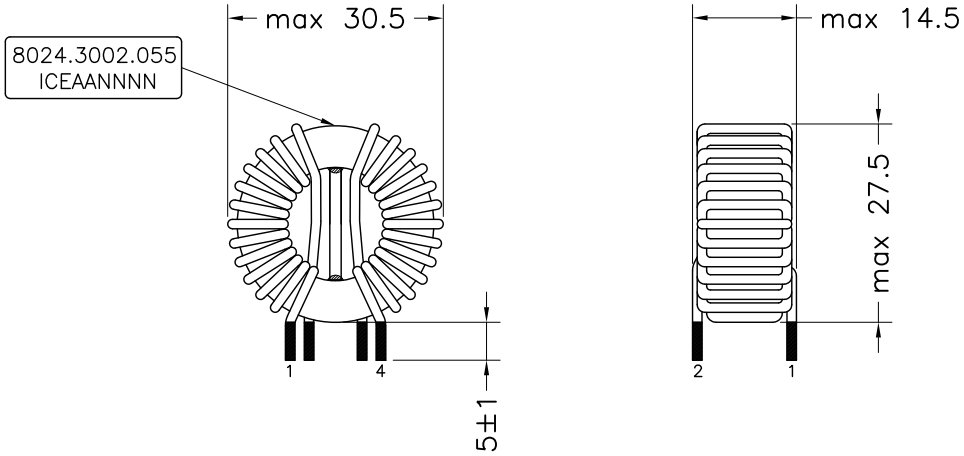

Electrical diagram

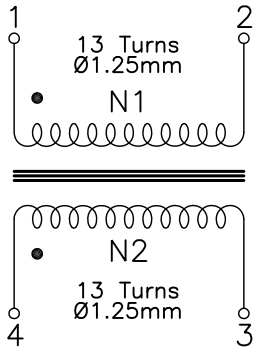

Dimensions in millimeters
2015/863/UE (RoHS–3) compliant

Electrical features

Inductance N1=N2 @ 10kHz – 100mV	2.23mH ±30%
Dielectric strength N1/N2 @ 50Hz	1000V
Core	3E12 – Ferroxcube
Copper Wire grade 2, thermal class H	E60641 or equivalent

REV	APPR DATE	RIF. MOD.	DESCRIPTION OF MODIFICATION	EMITTED	CHECK AND APPROVAL
02	29.11.23		Changed core, turns and inductance	A. Ridolfi	C. Picciani
01	14.07.23		Release	A. Ridolfi	C. Picciani

DESCRIPTION: **Common mode choke 2.3mH**

Mod. AQ 05.10	DOCUMENT TYPE	CODE	REVISION	RELASE DATE	PAGE
	S.T.	8024.3002.055	02	14.07.23	1of1